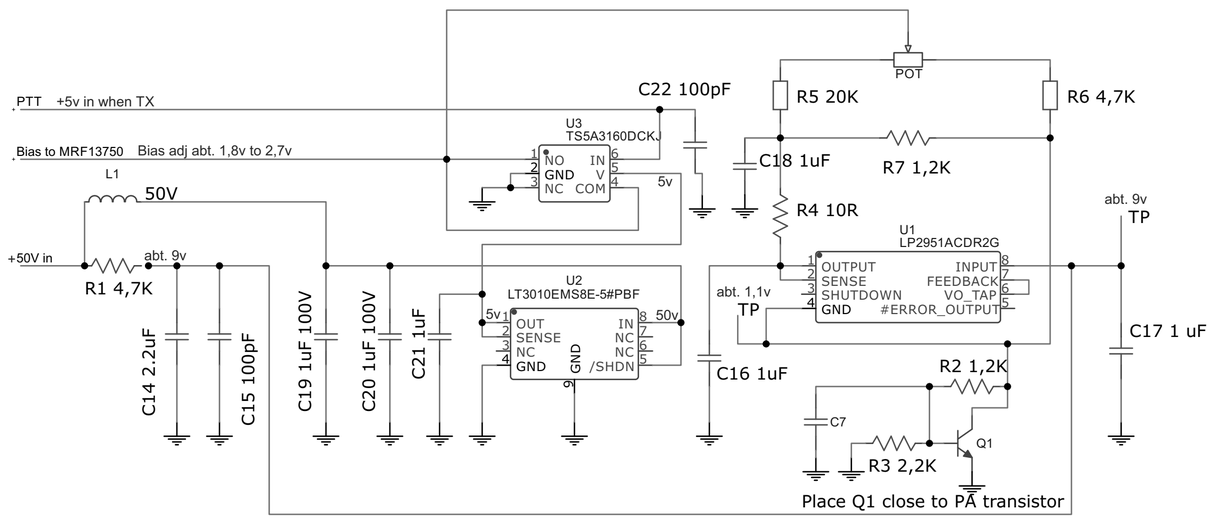

R1 4,7K 1210
R2 1,2K 0805
R3 2,2K 0805
R4 10R0805
R5 20K0805
R6 4,7K 0805
R7 1,2K 0905

C14 2.2uF 1206
C15 100pF 0805
C16 1uF 1206
C17 1 uF 1206
C18 1uF 1206
C19 1uF 100V 1206
C20 1uF 100V 1206
C21 1uF 1206
C22 100pF 0805

POT 50K 652-3224W-1-502E
L1 BLM21BD102

U1 LP2951ACDMR2G
U2 LT3010EMSB-5
U3 TS5A3159DCKR
Q1 BC847ALTIG

TITLE: BIAS for SSPA MRF13750		REV: 1.0
EasyEDA	Company: SM5DGX	Sheet: 1/1
	Date: 2022-06-23 Drawn By:	